2005 Mine Water Treatment Technology Conference

Hydropower Revenues for Abandoned Mine Drainage (AMD) Clean-Up

Roger Bason

Wednesday August 17, 2005. 3:50pm

Introduction:

- What is E3, Inc / Natural Currents,LLC?
- What is EMAR, EMARR,Inc.? (Bob Palermo w/ Kate Feissner)
- Project Mission and Scope.
- What is Conventional vs. Innovative Hydro?
- How do these systems work? Examples.
- What benefits can the process provide?
- Summary and Recommendations.

Mission:

"Utilize the natural flow of tidal, estuarine, river and channeled water flows to provide quality, networked hydroelectric power, regional economic development and environmental enhancement."

PROJECT MISSION

- Install and Operate a network of innovative hydro units with EMARR in AMD impacted region.
- Use of modular, cross flow and in-stream systems that optimize power generation.
- Provide off-grid or grid connected electricity.
- Use Revenues for Regional AMD Clean up.

ABANDONED MINE DRAINAGE (AMD) IMPACTS

- 44 of 67 Counties in PA are affected
- 5,172 documented sites, encompass 184,431 Acres
- 3,129 miles of streams impaired by AMD (6-7%)
- At current rate of funding,PA DEP - 50 years to eliminate high priority sites

- EMARR Region

County	*Sites*	*Un-Reclaimed AMD Features*	*Acres*
Luzerne	**211**	**1,169**	**10,466**
Carbon	**30**	**270**	**2,827**
Schuylkill	**316**	**2,639**	**16,355**
Columbia	**20**	**244**	**2,158**
EMARR	**577**	**4,322**	**31,806**
PA State Total	**5,172**	**27,376**	**184,431**
%	**11.2**	**15.8**	**17.2**

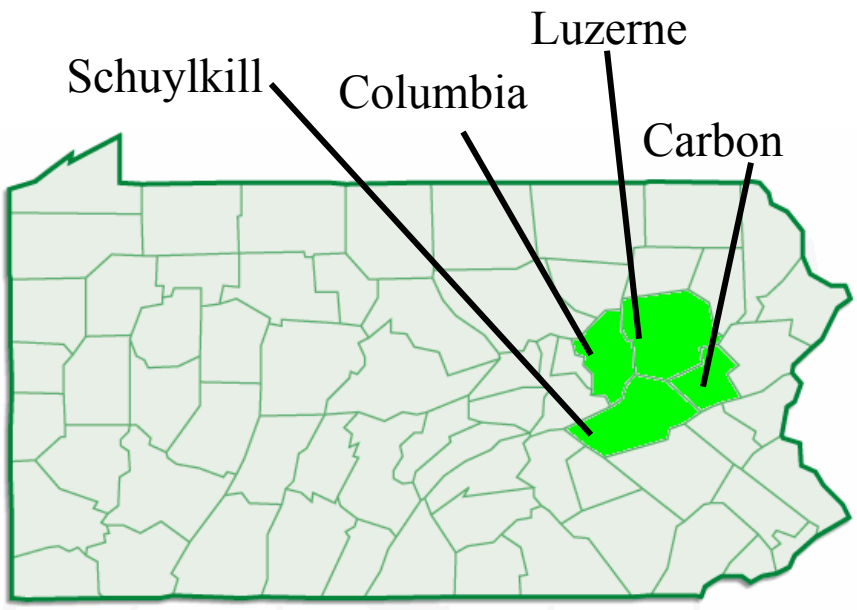

Goals and Objectives Technical

- Install a 100 kW ducted, cross-flow turbine below Jeddo Tunnel.
- Incorporate Phase I, 10 kW in-stream pilot system into demonstration site. Pilot Units are available.
- Establish commercially viable demonstrations.
  - **10 kW - In Stream System – Pilot Scale**
  - **100kW – Jeddo Tunnel System - Demonstration**
  - **1000 kW or 1 MW – Nescopeck SHEN System – Commercial Install**

Goals and Objectives
Regional Economic Development

- Unified community effort for greatest impact.
- Community Development Corporation Management
  - Revenues Managed Locally
  - Funds dedicated to support Clean up efforts
- Use of Local contractors for site improvements
- Demonstrate positive cash flow
  - Use of grants for project start up
  - Evaluate Municipal Bonds for System Financing

Mine Drainage Tunnels

- Strip Mining introduced in 1870's + deeper mining activities = more water from storms, snow melts,flooding.
- Resulted in mine closures, increased pumping costs and costs for pump maintenance.
- Drainage tunnels construction increased as solution;
  - Rock tunnels to Dewater mine fields.
  - Generally driven cross strike.
  - Conduit for pump discharge.
  - Reduced head for pumps to work.
- Problem Worse in EMAR due to
  - Perched Beds, Discontinuous Coal Fields
  - Requires Several Individual Tunnels for Drainage

Nescopeck Watershed

The Jeddo Tunnel Drainage System

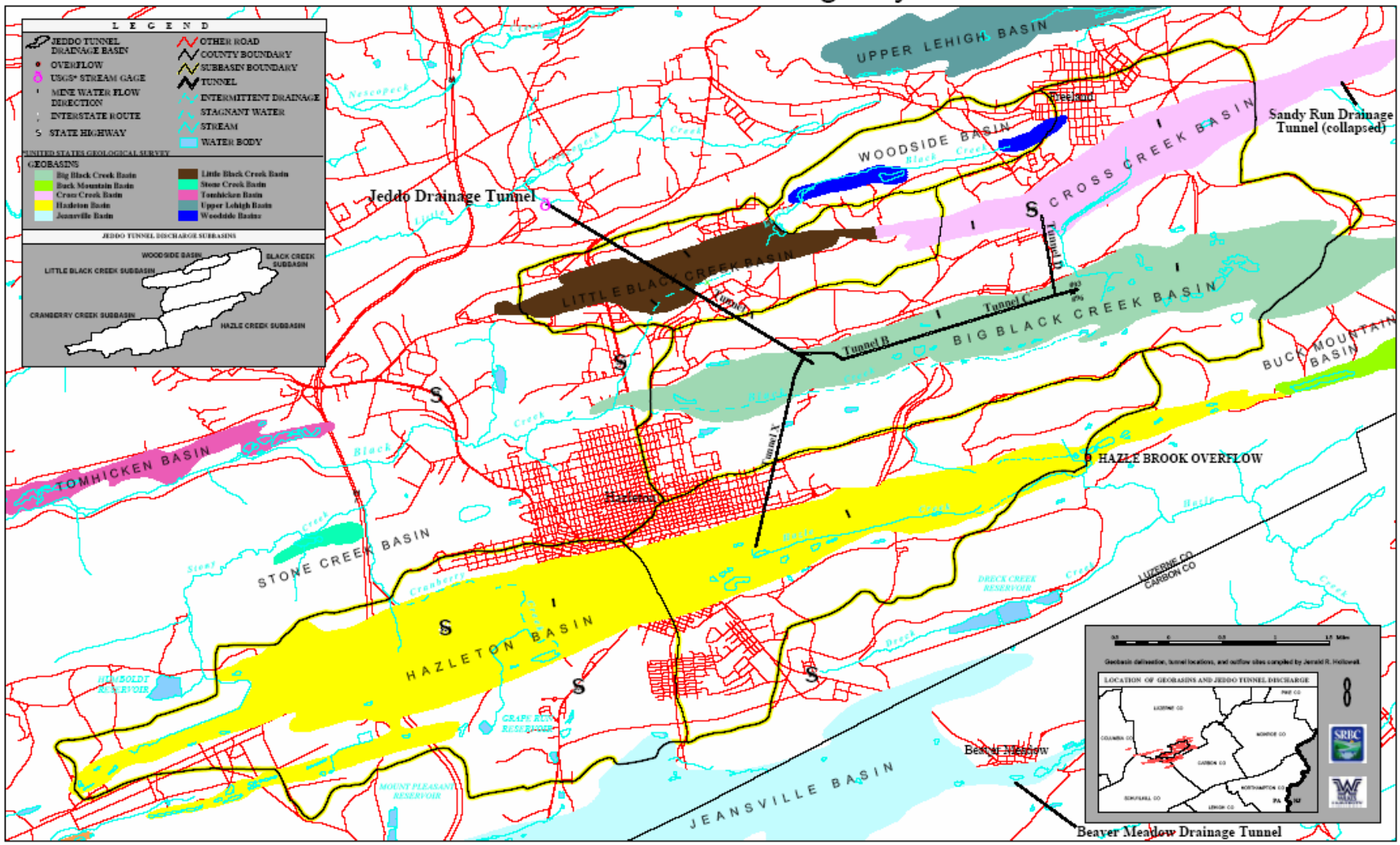

Jeddo Tunnel Impacts

- Drains 4 major coal fields
- Total Drainage 32.24 sq. mi
- 20,000 to 40,000 gal/min
- Peak 157,000 gal/min
- Violates PA DEP Standards
  - pH 3.6 to 5.0, ave 4.3
  - High conc dissolved metals
- Largest point source
  - Susquehanna River Basin
- Total 8.5 Miles Network
- Built 1891 to 1934
- Longest Tunnel 15,300 ft.

Movie 1

Hydro Applications

- Conventional hydro power
  - Use of Dams, high civil engineering costs,
  - Heavy Environmental Cost.

- Innovative Hydropower
  - Low Head or No Head,
  - Modular applications,
  - Reduced Civil Costs,
  - Operate with pH to 3.0,
  - Tested operational capability.

Hydro Projects
Conventional Design

The Pelton Turbine

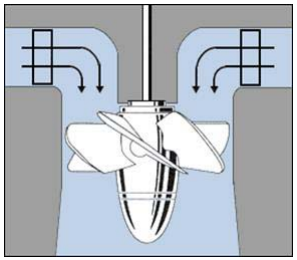

The Kaplan Turbine

The Francis Turbine

Small Hydro, Conventional Plants

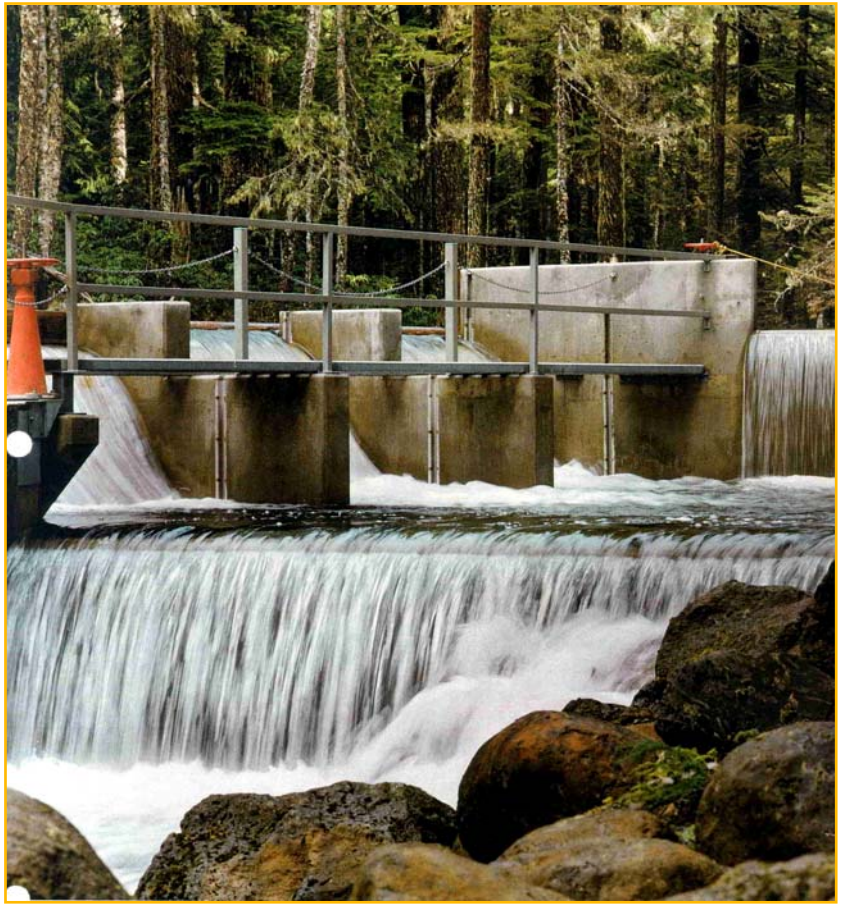

- China -19,000 MW, 43,000 plants
- Sweden - 8,400 MW, 1,350 plants
- USA - 3,400 MW, 1,700 plants
- Italy - 1,969 MW, 1,400 plants
- France - 1,646 MW, 1,500 plants

Innovative Hydro Technology - Gorlov

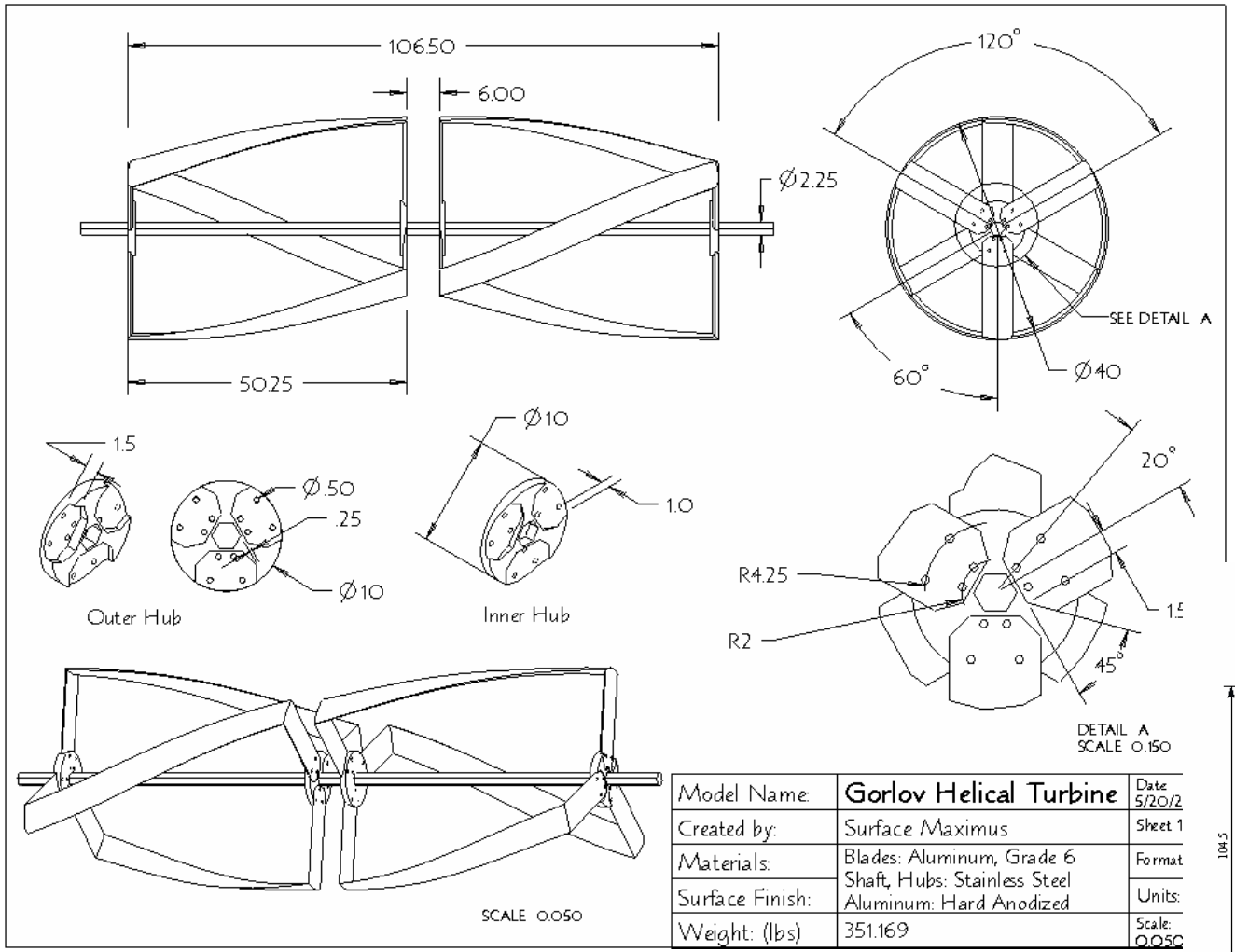

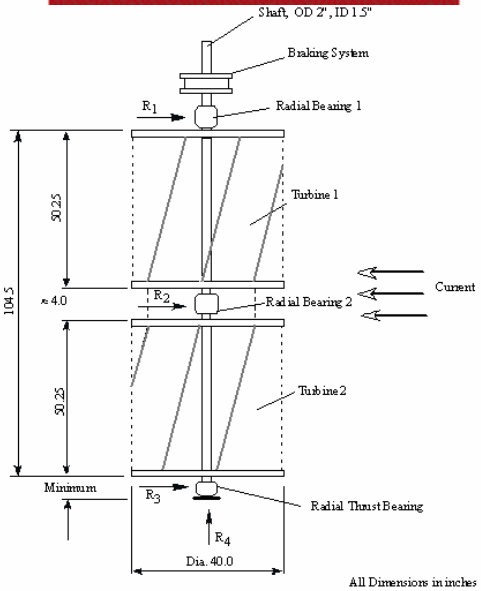

Innovative Hydro
Full Spectrum Analysis

1. **Resource Basics** – Tides, Currents, Constrained, or Forced Flows
2. **Site Assessment** – Power Resources, Mapping, Socio-Economic Factors, Transmission / Distribution Grid, etc.
3. **Deployment Options** – System Design Alternatives
4. **Technology** – Unit Selection, Design Optimization, Materials
5. **Energy Analysis** – System Performance and Efficiency Factors
6. **Energy Supply Strategies** – Grid vs. Storage Approaches
7. **Environmental Issues** – Aquatic Ecology, Navigation, Safety
8. **Economics** – Short Term, Long Term, RPS Impacts
9. **Systems Testing** – Measurement and Monitoring
10. **Permitting and Licensing** – Resource Agencies

In-Stream Turbines

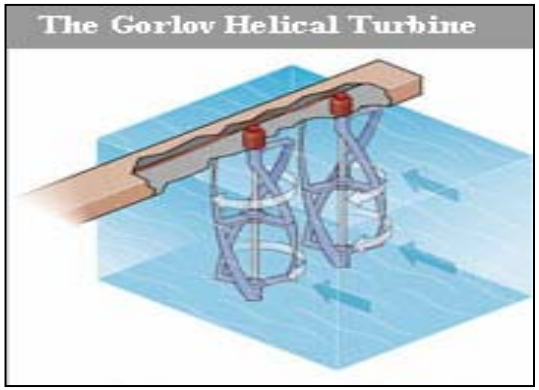

The Gorlov Helical Turbine

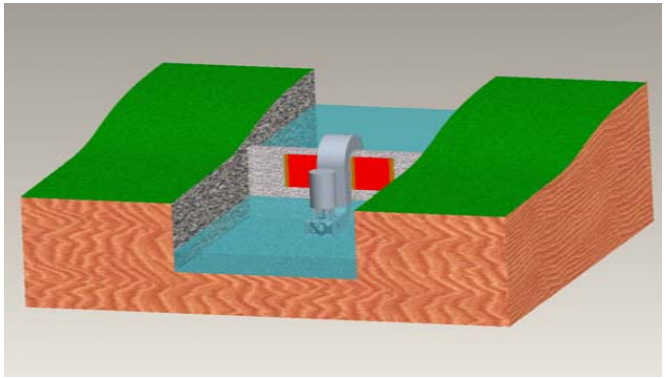

The Ducted 6-Blade System

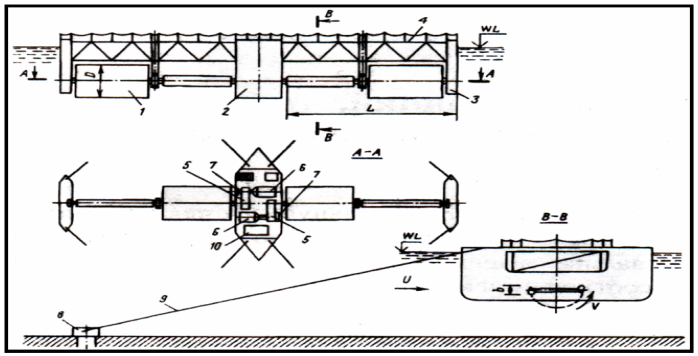

Orthogonal Turbines

CFD MODELING

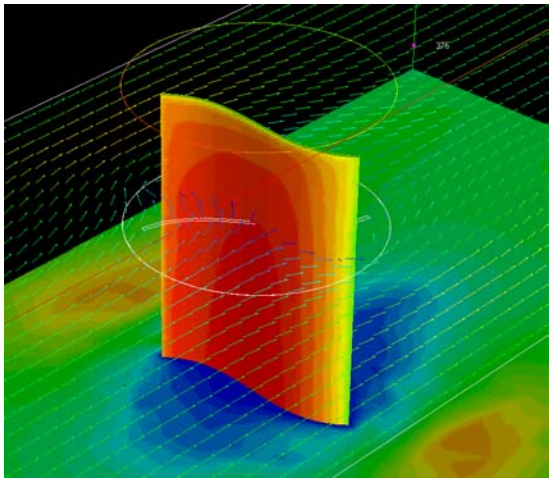

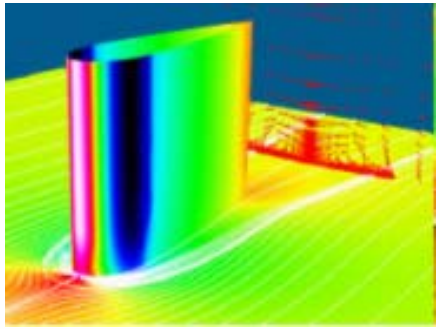

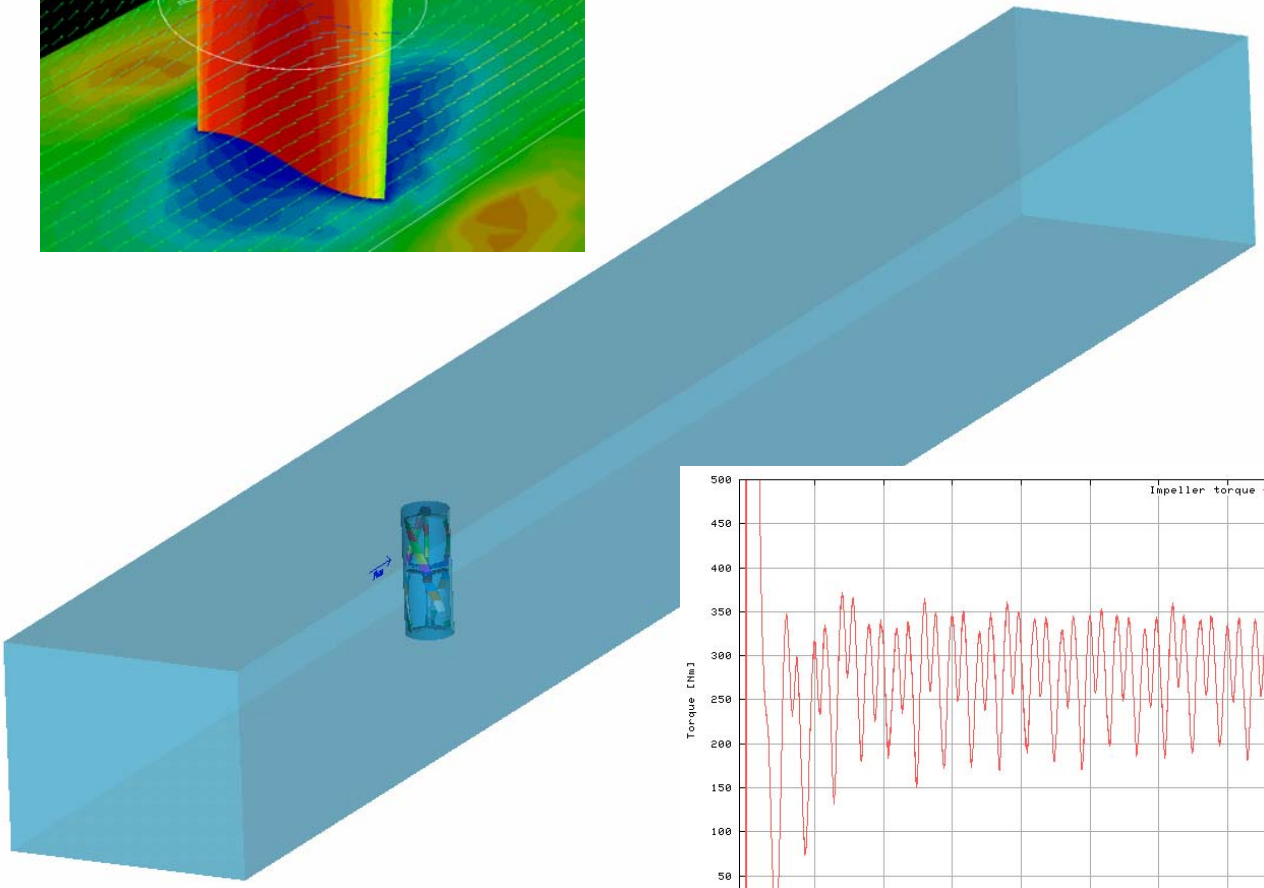

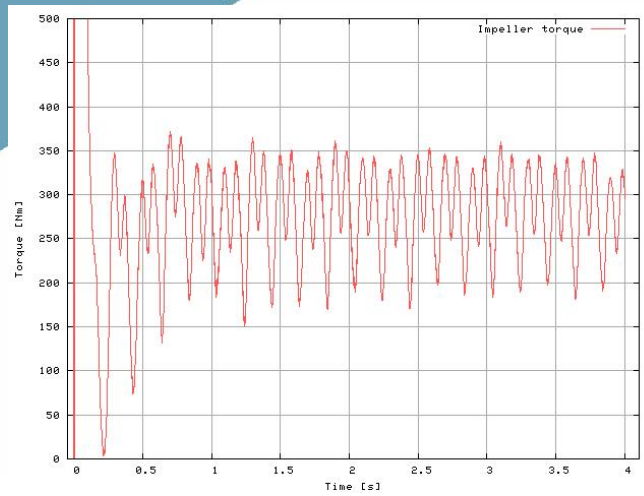

The Gorlov Turbine

Movies

TECHNOLOGY– SYSTEM PERFORMANCE

GHT MAIN PARAMETERS

	VtrSpeed, m/s				
	3	2.5	2	1.5	1.3
Power of Unit, kW	11	6.5	3	1.4	0.9
Force, kg (?)	1245	865	553	311	234
RPM range	108-144	90-120	72-96	54-72	47-62
RPM range	150	96	72	60	50
Gear Ration	12	18.75	25	30	36
Shaft Torque, Nm	9730	4837	1990	744	366
				558	278
				3	2
				4.2	1.8
				375	298
				,320	$3,688
				,267	$2,049

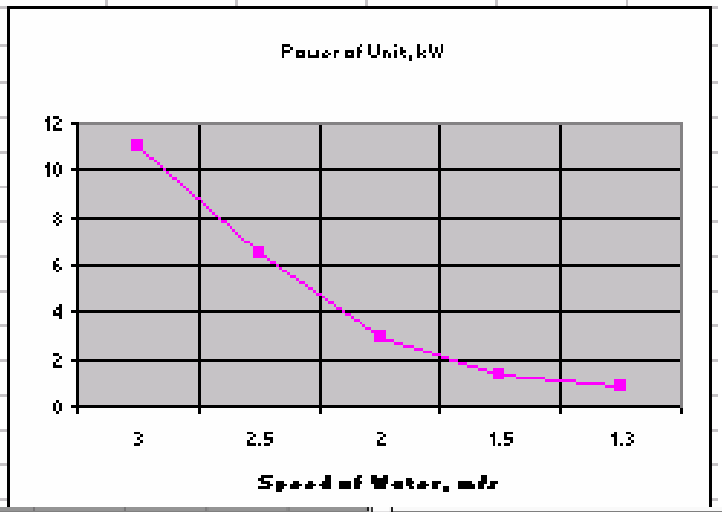

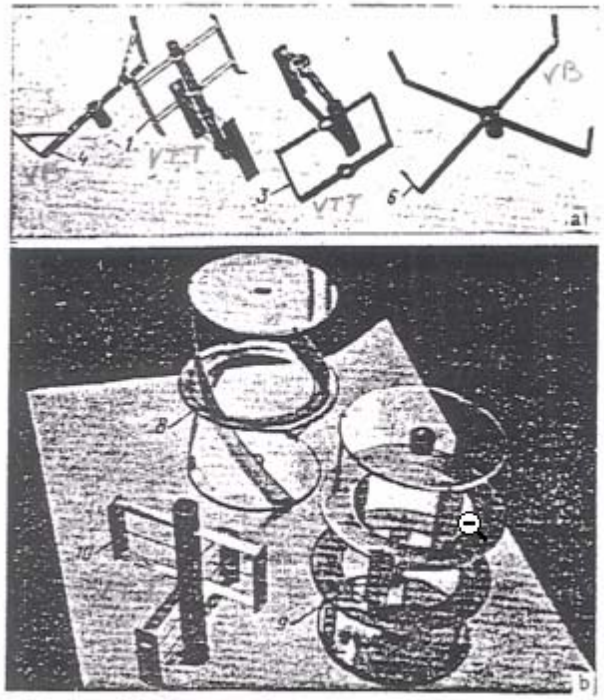

Fig. 1. General view of rotor models: a) of metal; b) of organic glass; 1, 3, and 10) VTT schemes; 4 and 6) VB schemes.

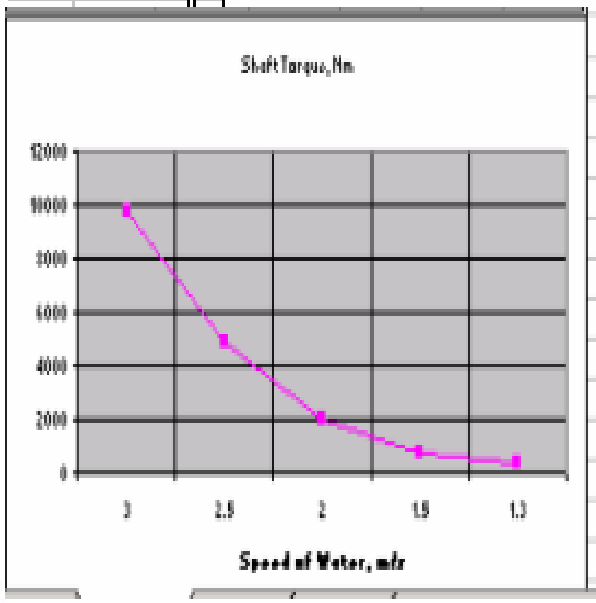

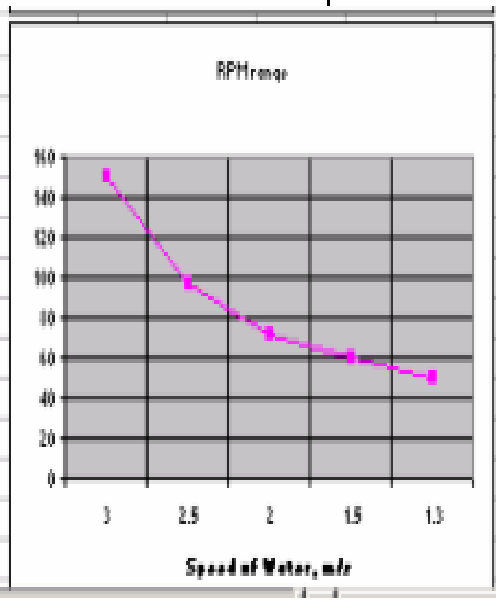

Tidal Open Channel Fence

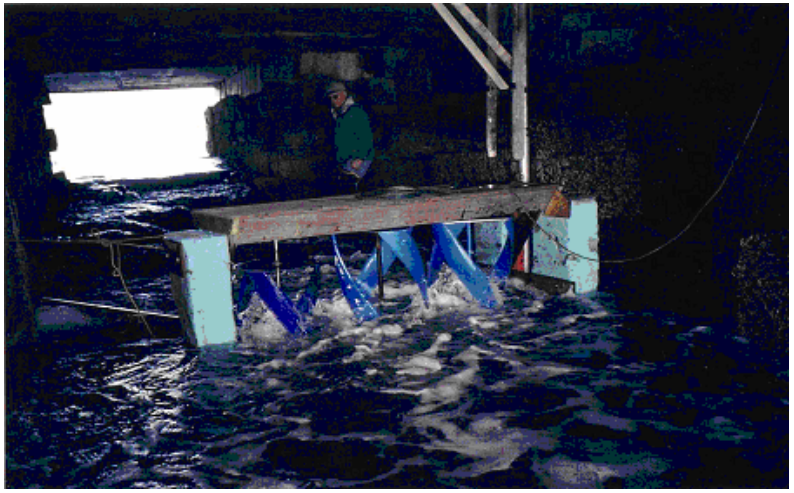

BARGE DEPLOYMENT OPTION

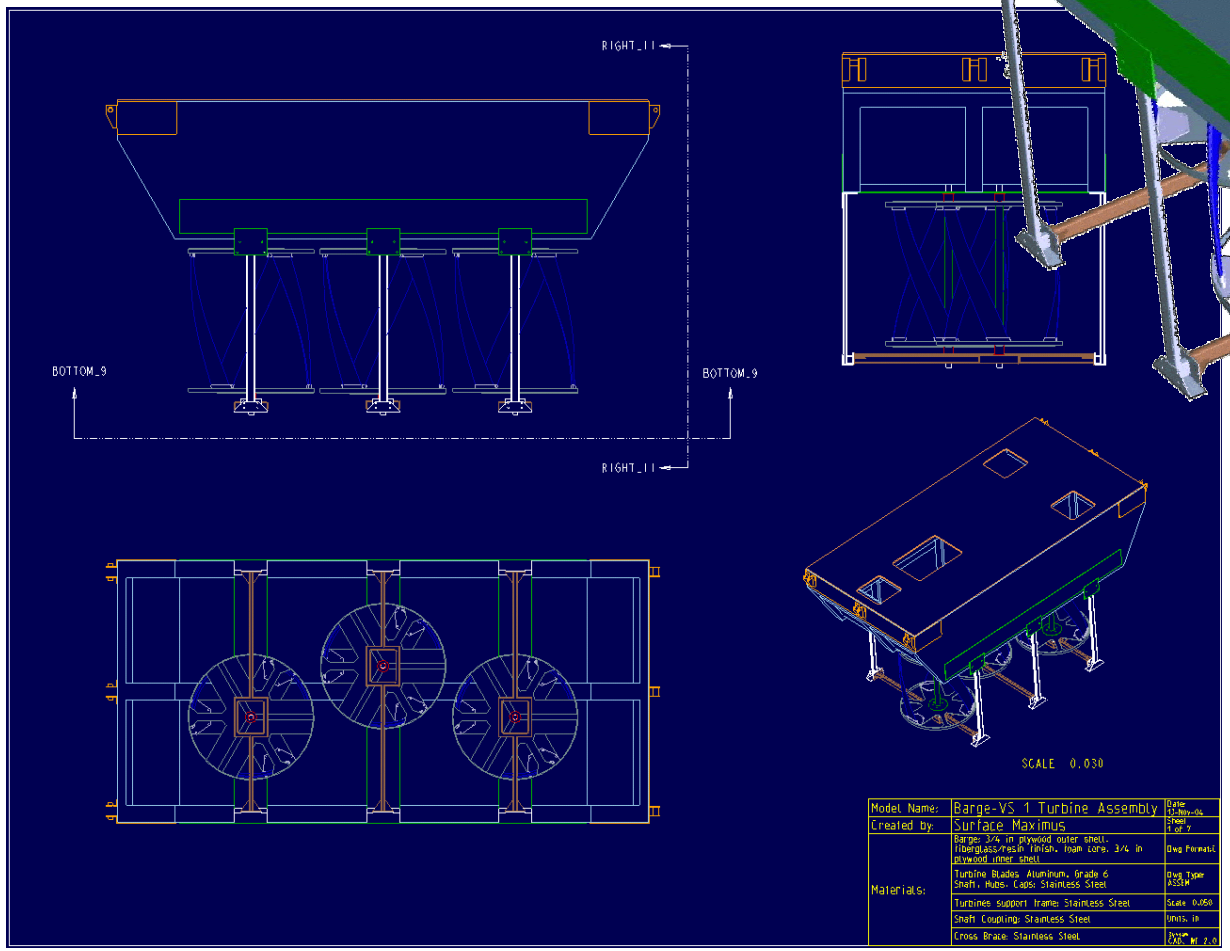

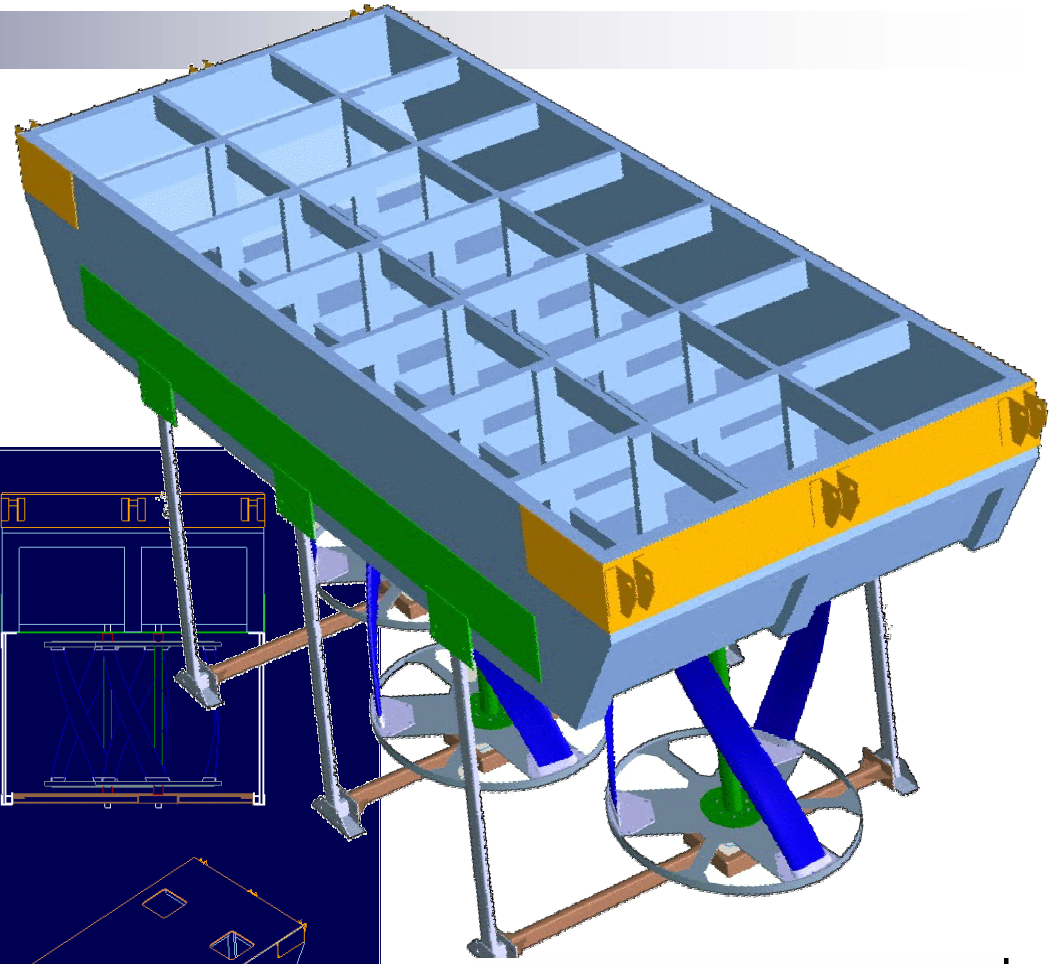

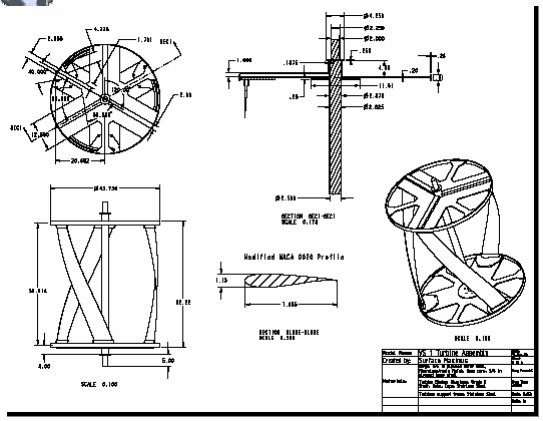

GCK Barge Tilt Mechanism

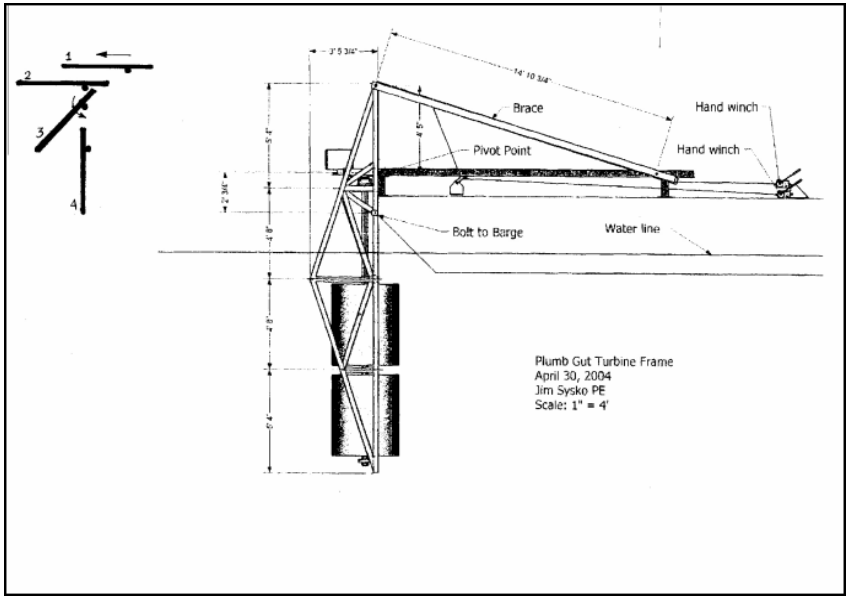

Horizontal Deployment of Catamaran

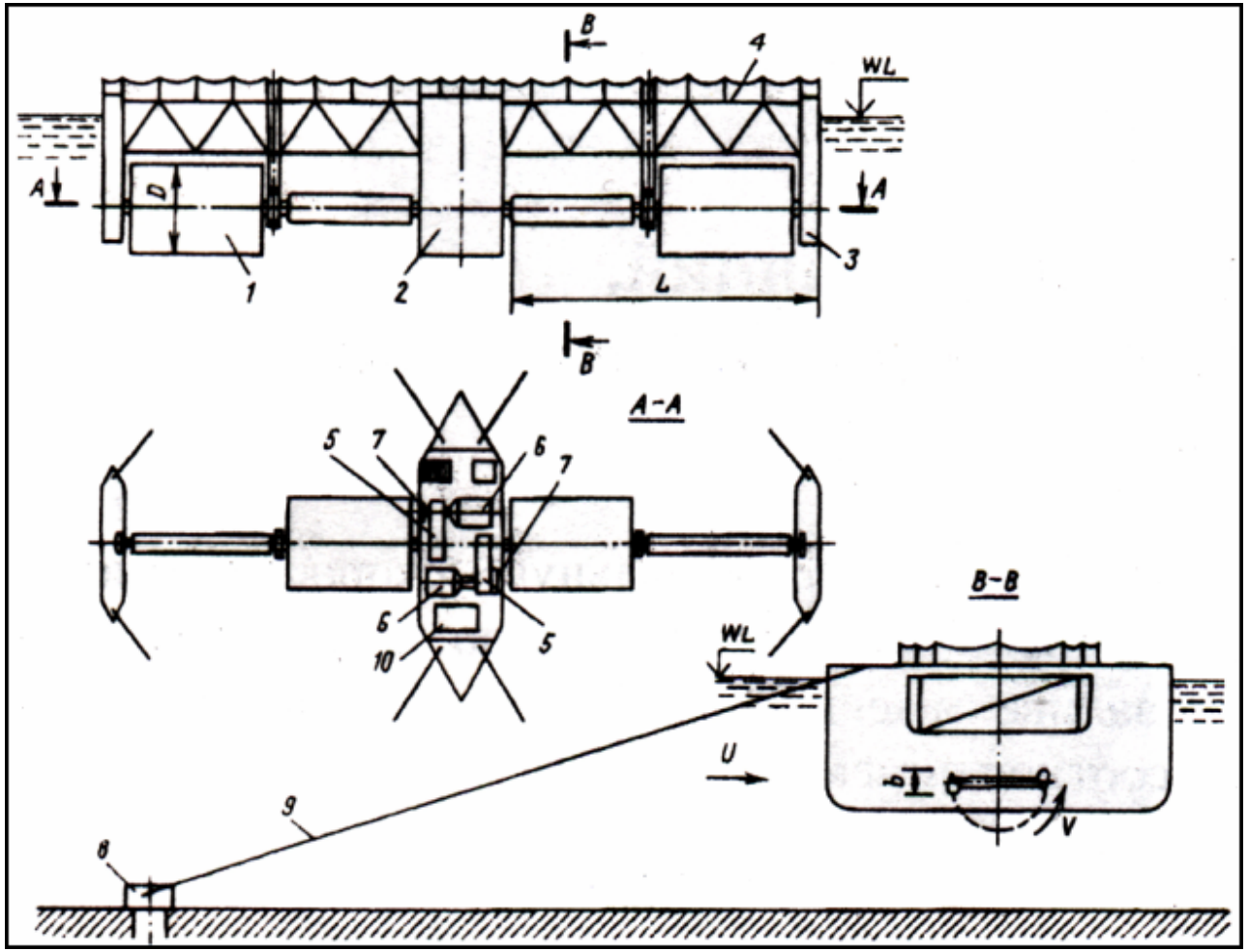

Channel - Canal Locks or Industrial Flows

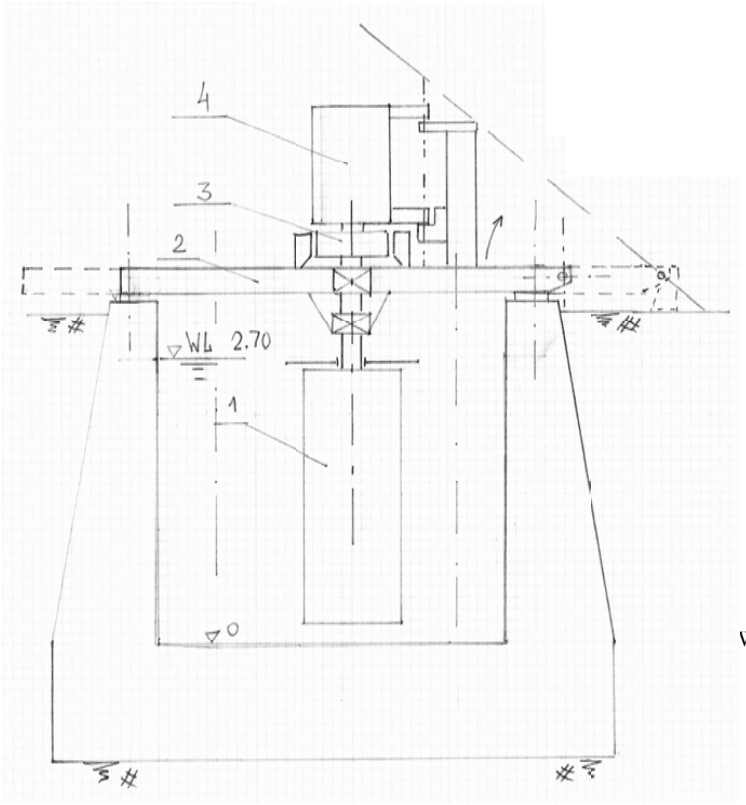

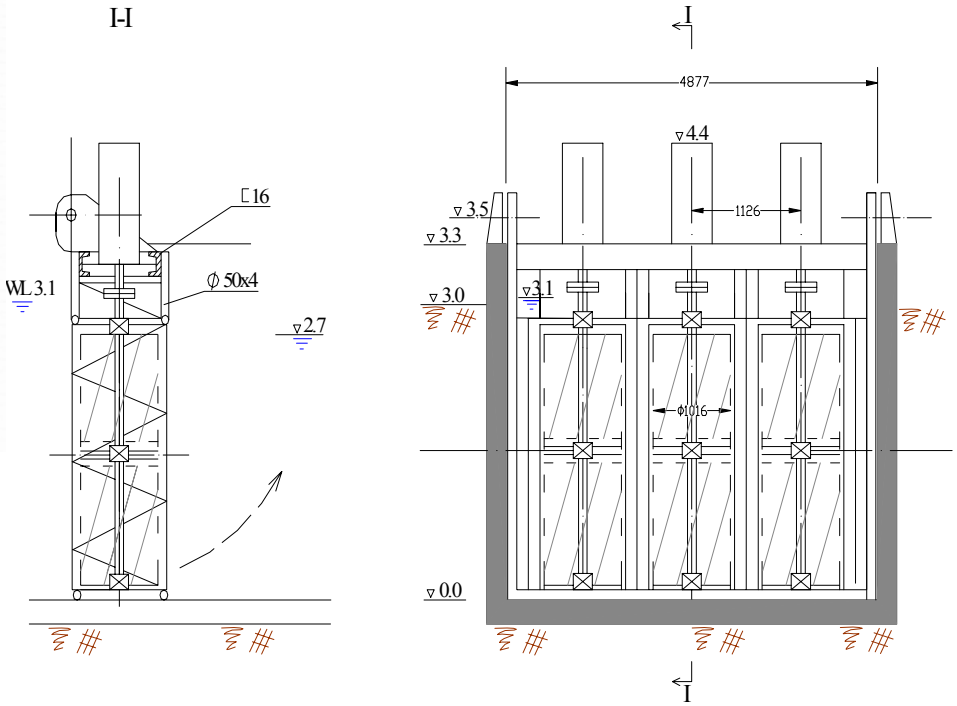

Fig. 9

DEPLOYMENT FROM BARGE

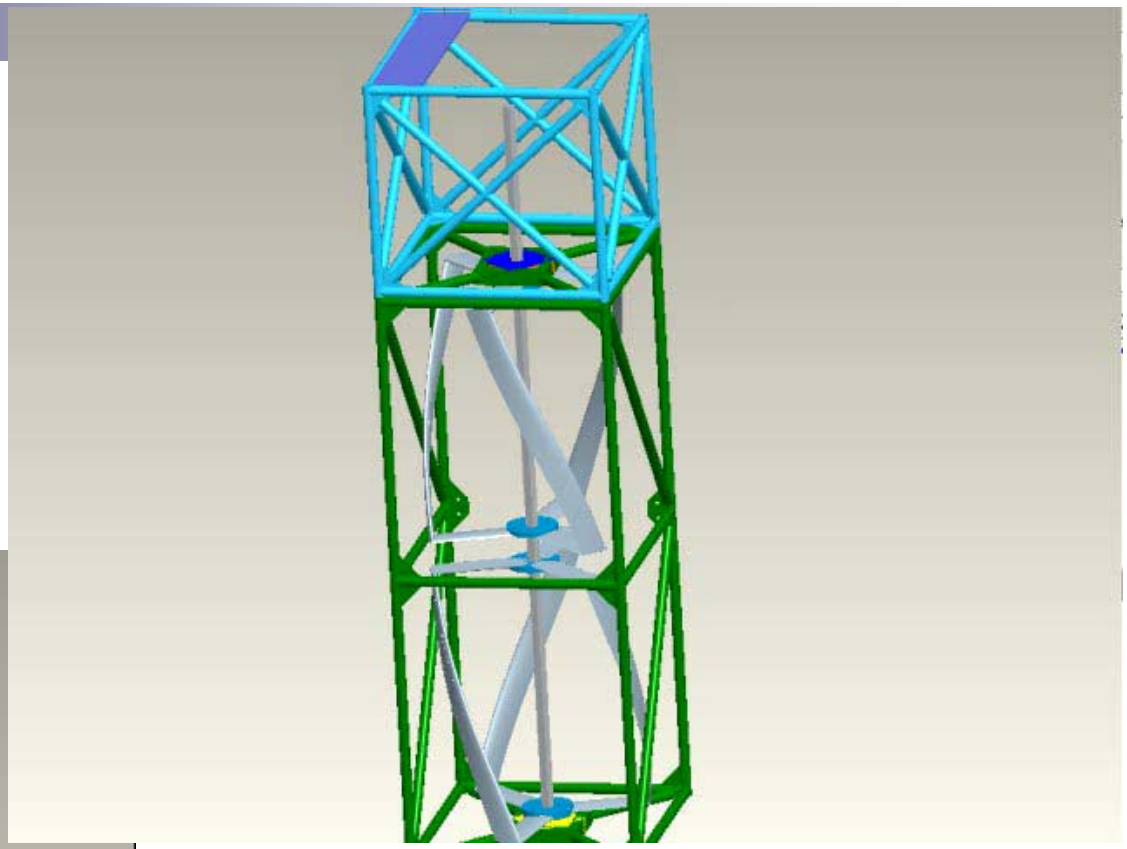

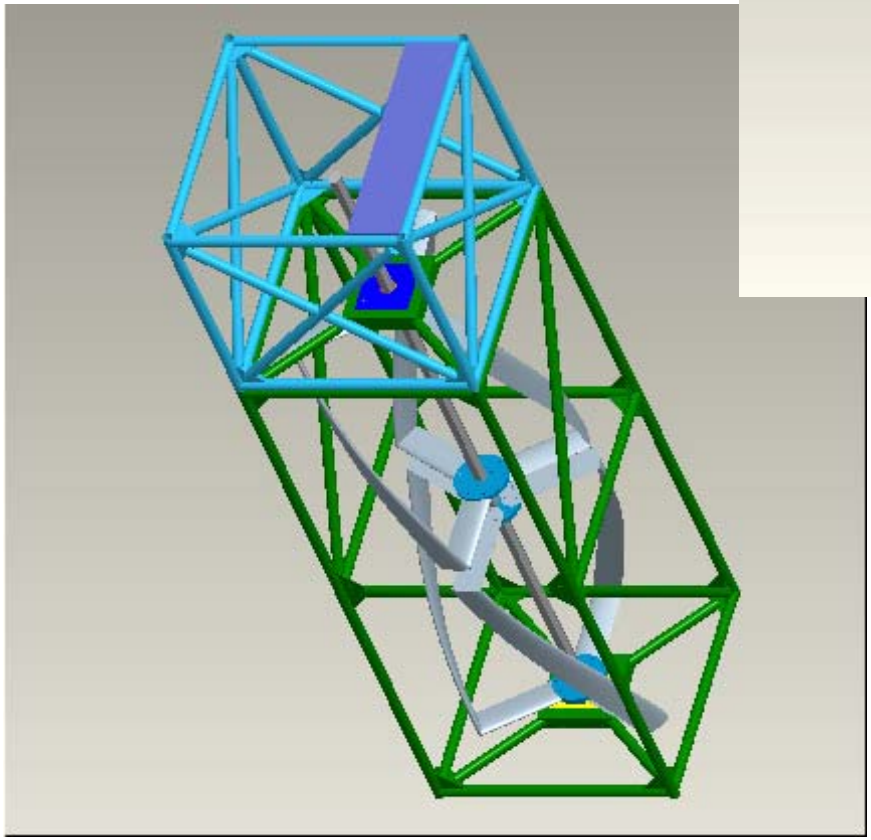

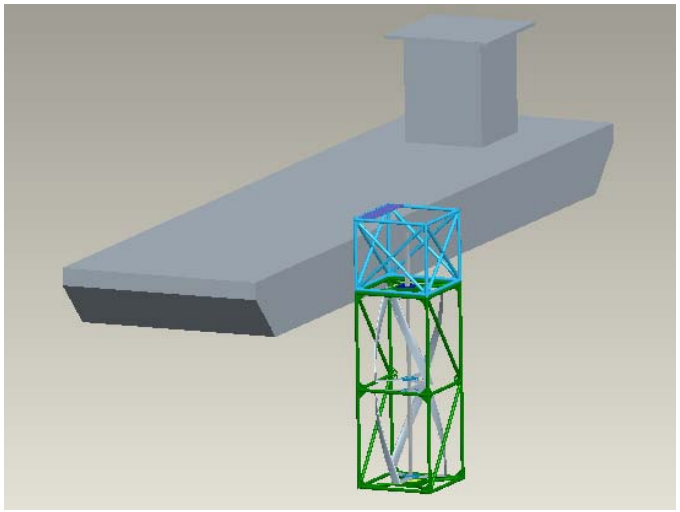

Siphon, Ducted

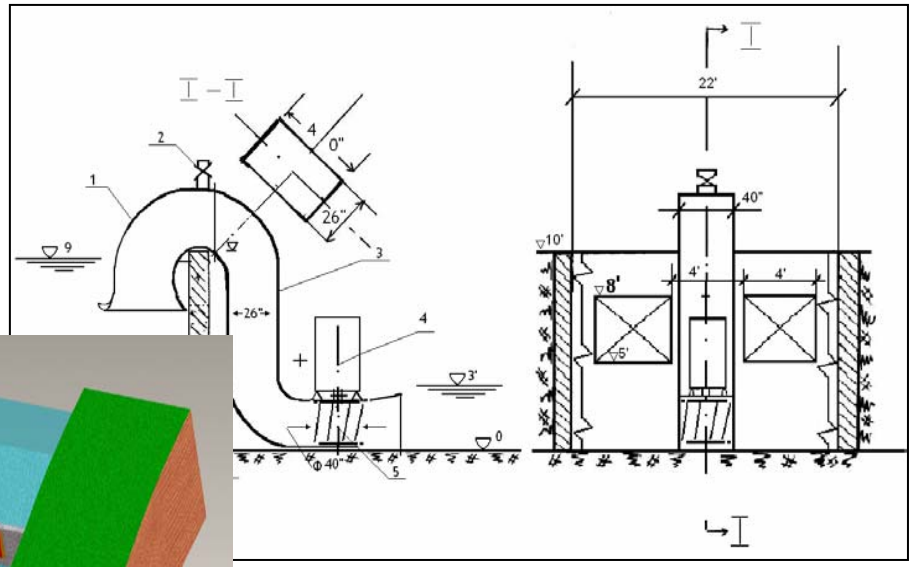

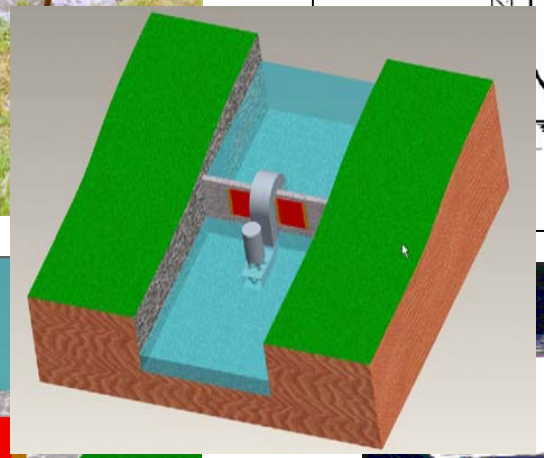

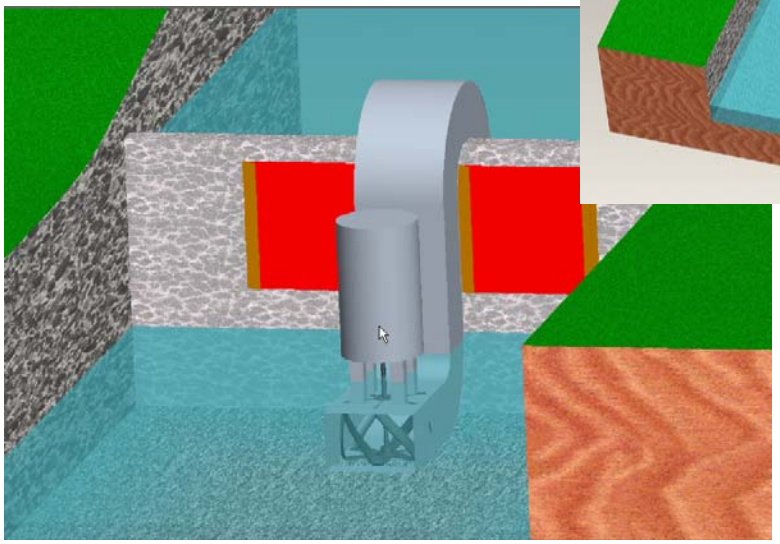

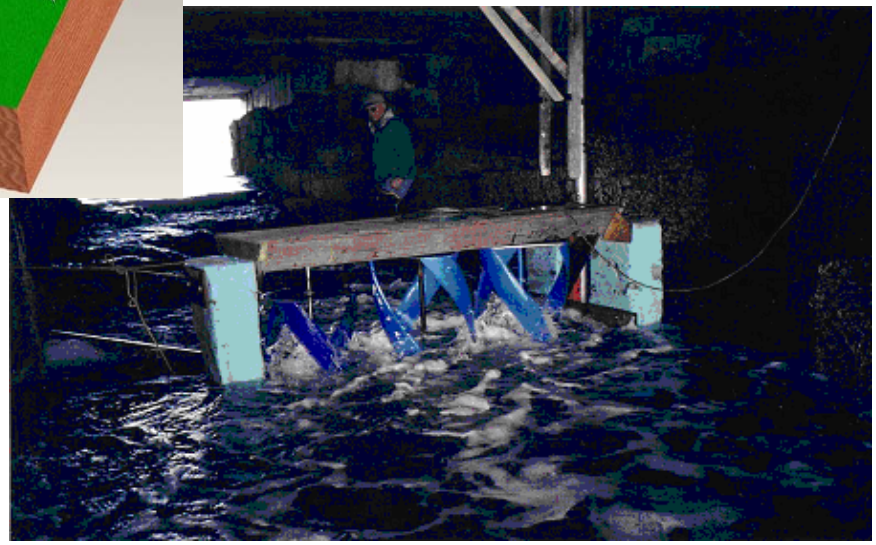

Cross Flow Turbines

- Modular Units
  - Siphon
  - Water System
  - Existing Dams
  - Parallel
  - Cascade

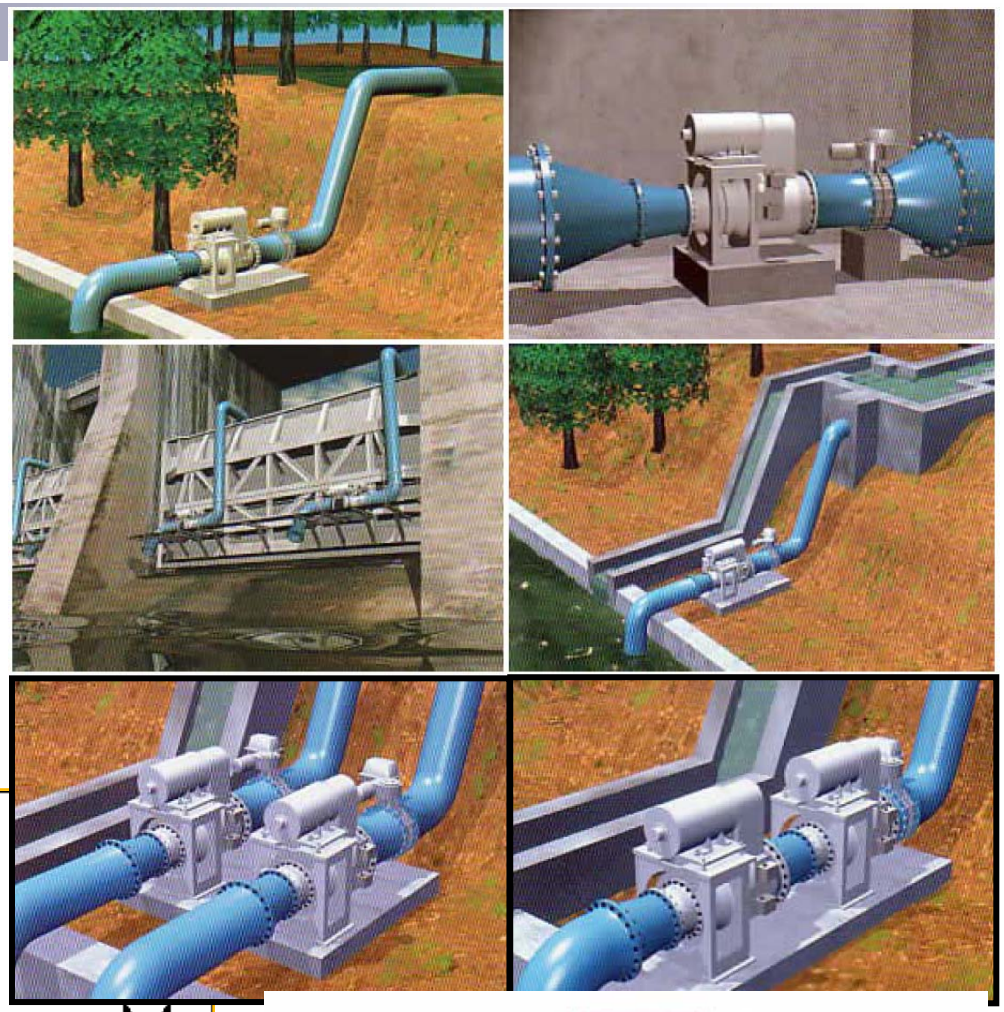

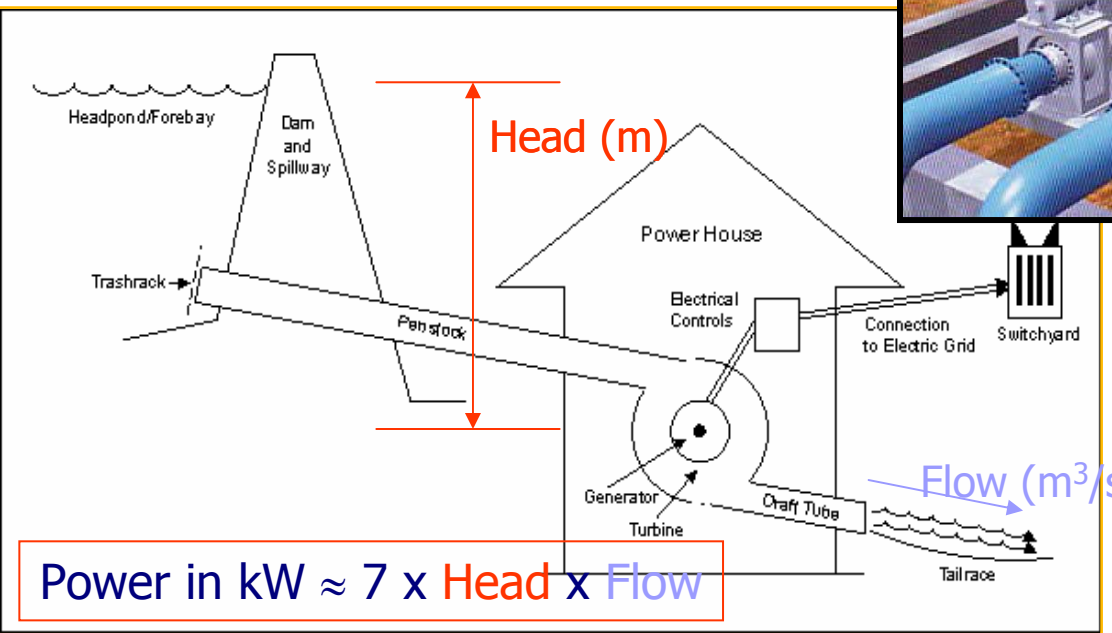

Power in kW ≈ 7 x Head x Flow

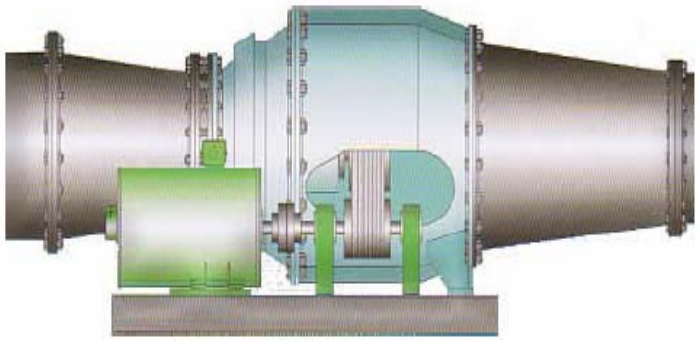

POWER UNITS SELECTION

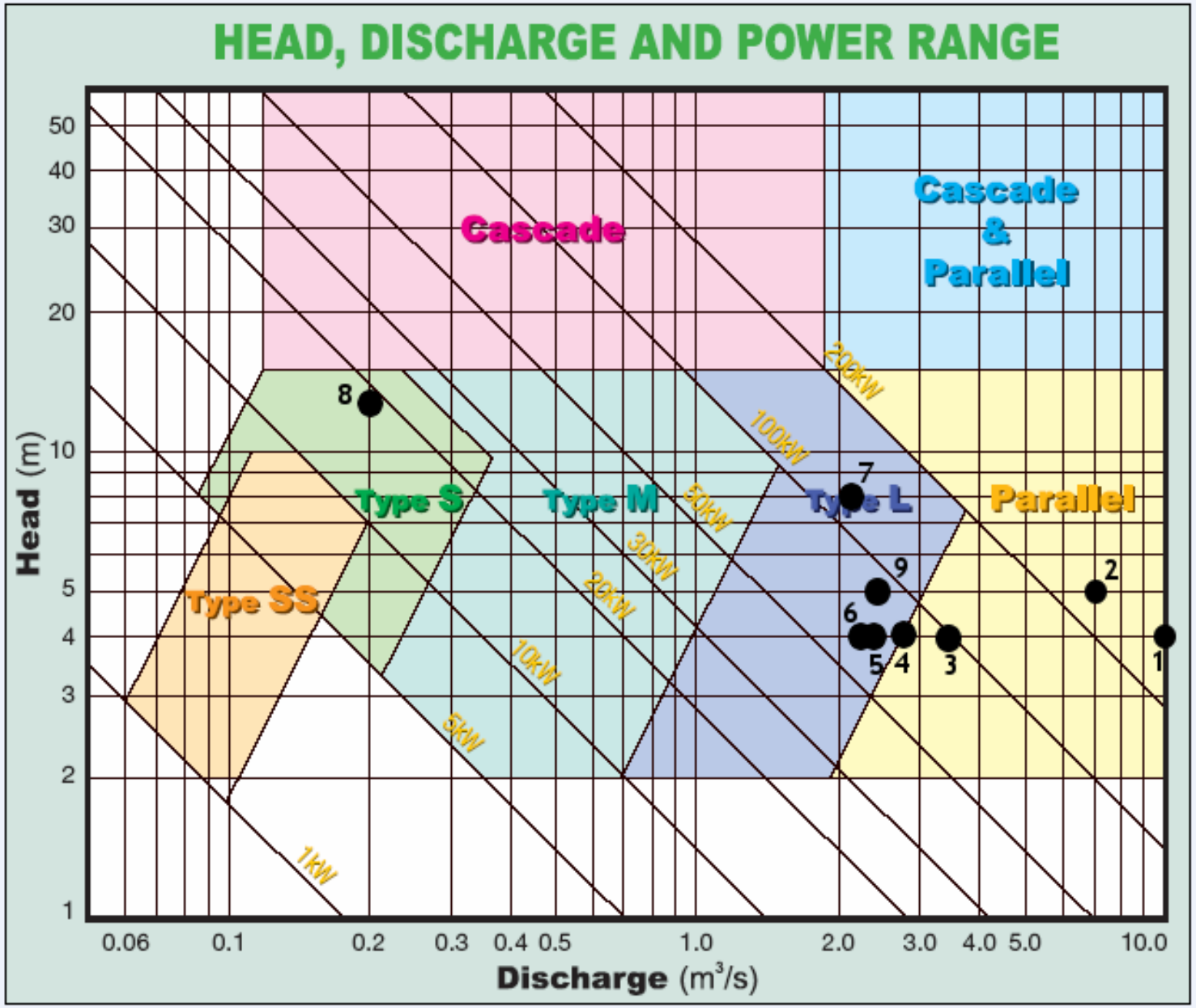

Vision Statement

Sustainable Hydroelectric Energy Networks SHENs

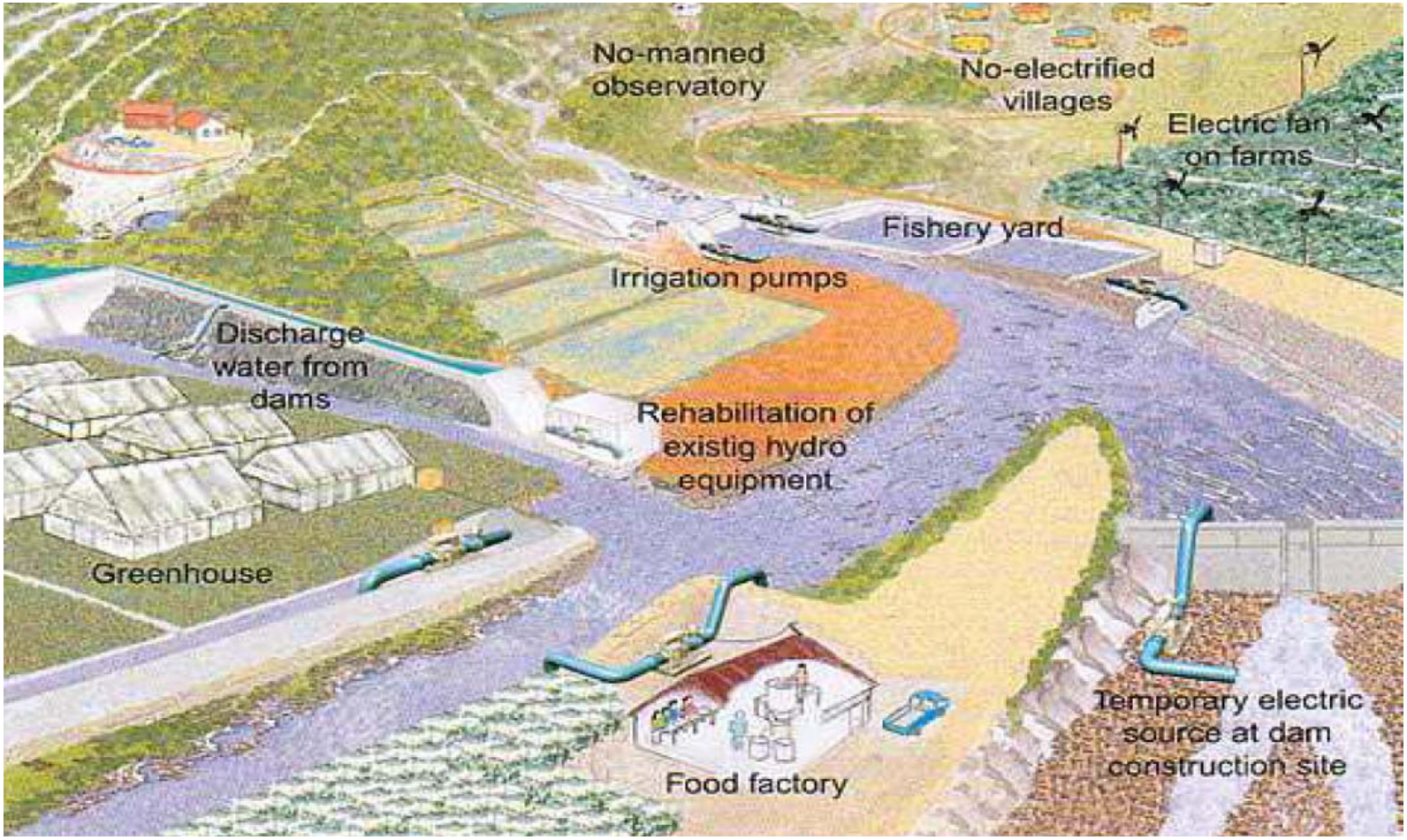

EMARR Hydro Sites

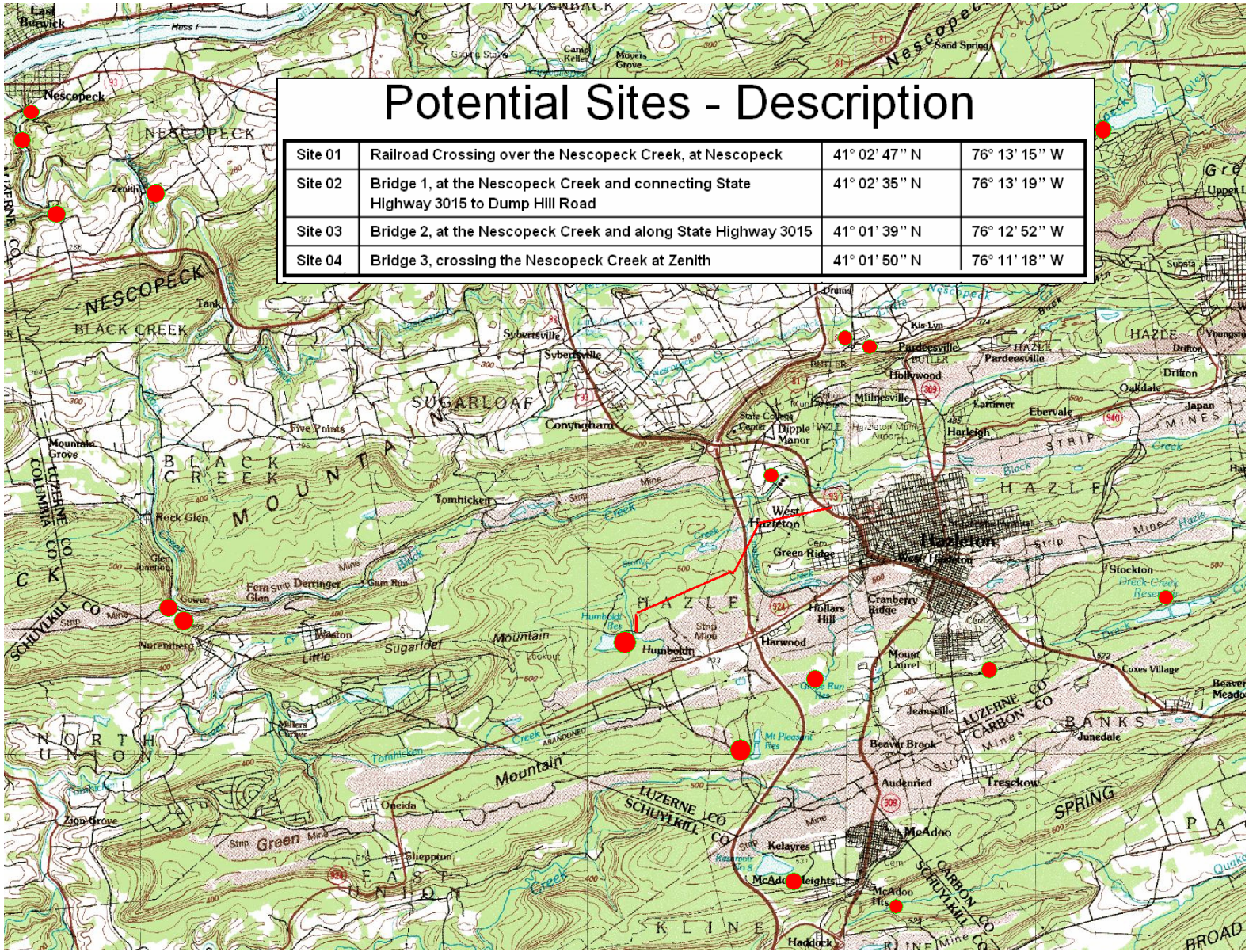

Potential Sites - Description

Site 01	Railroad Crossing over the Nescopeck Creek, at Nescopeck	41° 02' 47" N	76° 13' 15" W
Site 02	Bridge 1, at the Nescopeck Creek and connecting State Highway 3015 to Dump Hill Road	41° 02' 35" N	76° 13' 19" W
Site 03	Bridge 2, at the Nescopeck Creek and along State Highway 3015	41° 01' 39" N	76° 12' 52" W
Site 04	Bridge 3, crossing the Nescopeck Creek at Zenith	41° 01' 50" N	76° 11' 18" W

Project Planning Process

- Site Maps - USGS, Land Owners, Aerials, Site Photos, Digital Video
- Hydrologic Data - Flow Data available, Interpretation and Extrapolation
- Preliminary Design - Overview, Output Parameters, 3-D Presentation
- Power Production - Estimates available hydroelectric power
- Design Parameters - Approach and Assumptions
- Economic Analysis - Spread Sheet Criteria, Interpretation, Summary
- Permits Required - Overview of Approach, Encroachment, General
- Community Issues - Land Ownership, Zoning Ordinances
- PPL Utility concerns - Recommendations

Grid or Off Grid?

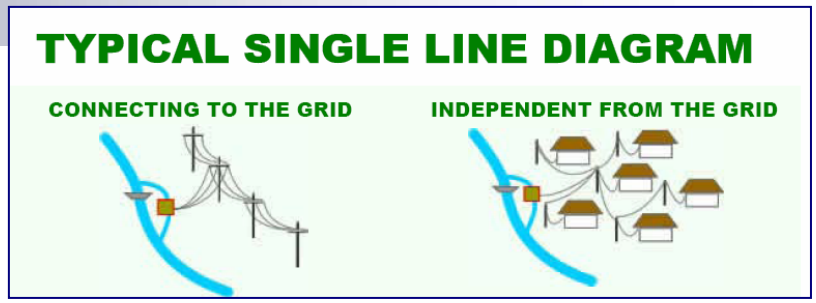

- Electricity for
  - Central-grids
  - Isolated-grids
  - Remote power supplies

…but also…

  - Reliability
  - Very low operating costs
  - Reduced exposure to energy price volatility

- Type of civil works
  - Run-of-river
    - No water storage
    - Power varies with flow available from river: lower firm capacity
  - Reservoir
    - Higher firm capacity year-round
    - Significant damming usually required

Nescopeck Creek Watershed

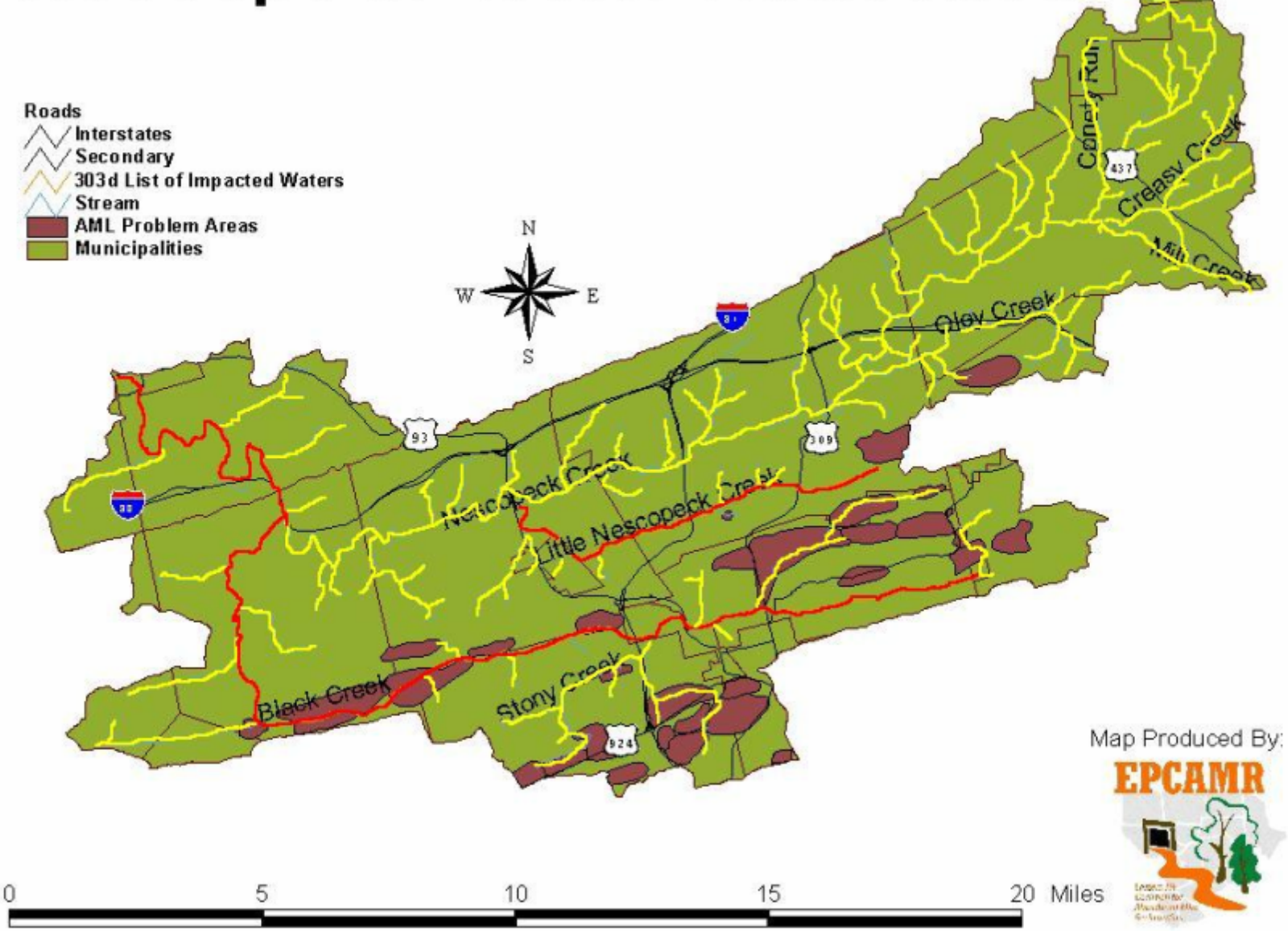

PROPOSED
HYDRO SYSTEM – 1 MW, 9 Sites

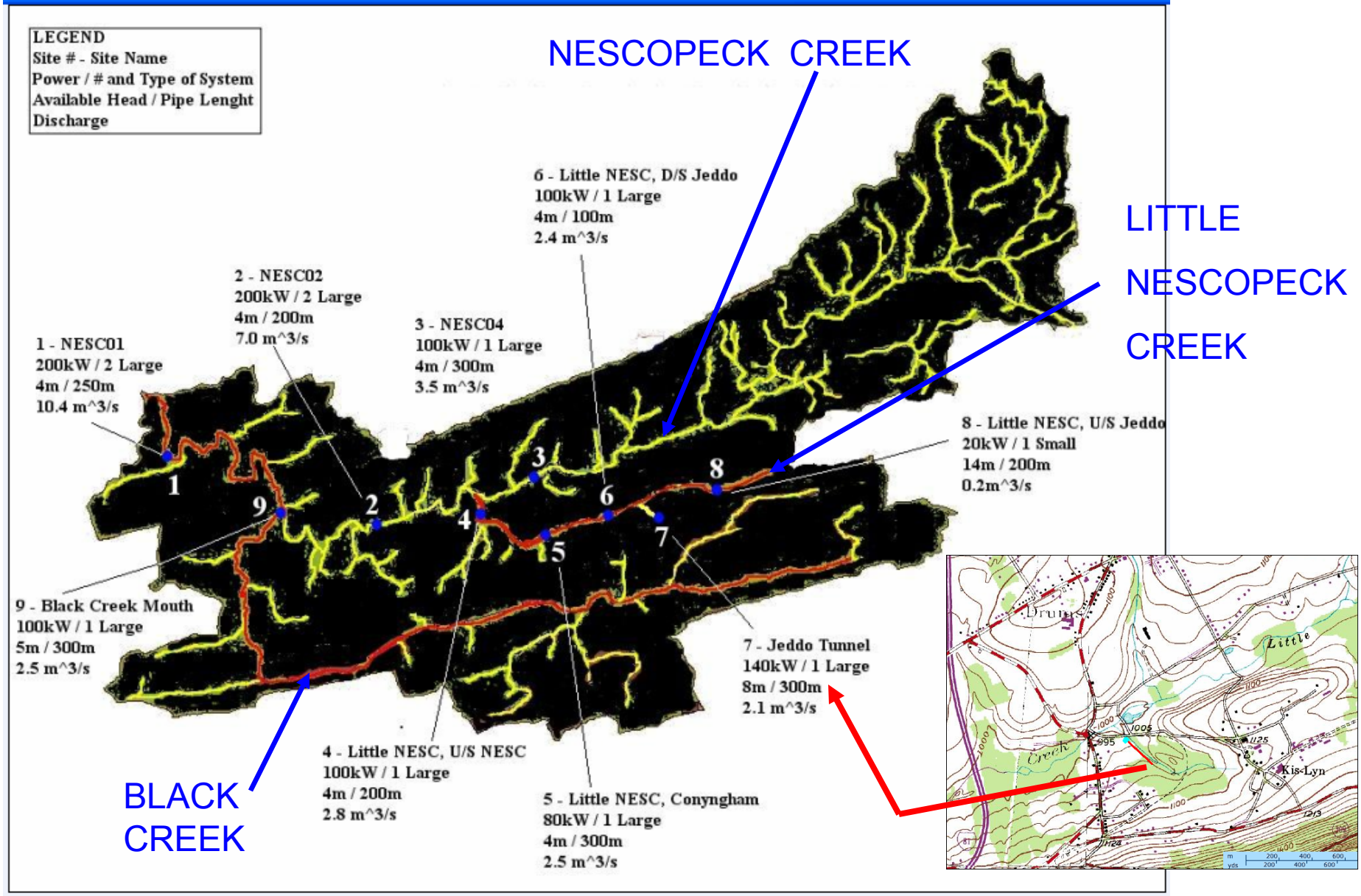

NESCOPECK DISCHARGE

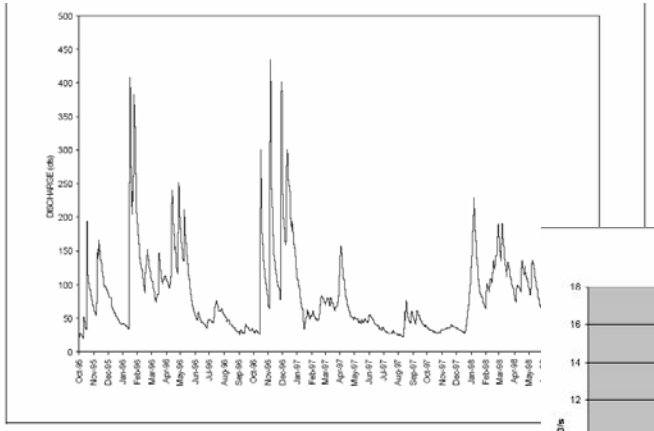

Figure 5. Discharge From Jeddo Tunnel, Water Years 1996-98

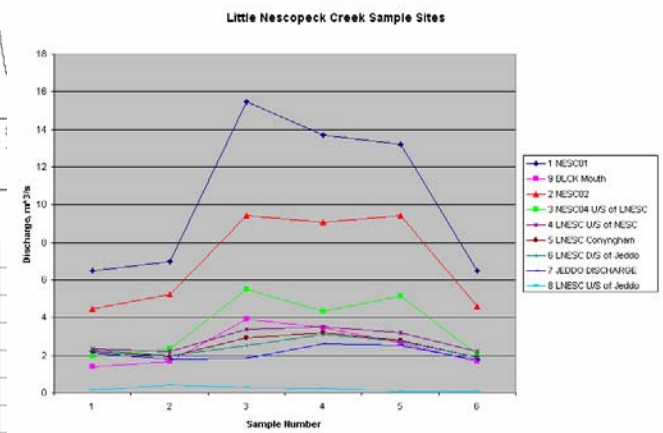

gpm	1	9	2	3	4	5	6	7	8
Little Nescopecl	NESC01	BLCK	NESC02	NESC04	LNESC	LNESC	LNESC	JEDDO	LNESC
Date-time		Mouth		U/S of LNESC	U/S of NESC	Conyngham	D/S of Jeddo	DISCHARGE	U/S of Jeddo
031010-0930	102,624	22,189	70,626	30,656	37,397	35,170	36,174	33,426	1,882
031024-0820	110,524	26,235	82,962	37,492	34,749	31,046	31,163	28,796	6,096
040321-0930	244,886	61,975	149,589	86,982	53,462	46,299	40,147	29,225	4,121
040501-0925	217,393	55,165	143,953	68,753	55,776	50,442	49,519	41,381	3,360
040512-0925	209,318	41,967	149,755	81,495	50,625	44,527	43,348	39,799	1,631
040524-0910	102,937	26,265	72,727	32,621	35,066	30,268	30,380	27,800	1,631

Conversion

gpm	m/s	D, m	A, m^2	m^3/s	MGD	kW	m/s	A, m^2	Disch, m^3/
10,000	**3.0**	**0.5175**	**0.210**	**0.631**	**14.4**	**10.0**	**3.0**	**2.5**	**7.5**

Jeddo vs Rondaxe Lake

Disch, m^3/s	isch, m^3,	H, m	Eff	U, m/s	d, m	h, m	A, m^2	g, m/s^2	P, kW
12	**1.37**	**1.7**	**65%**	**2.1**	**1.0**	**0.6**	**0.6**	**9.8**	**14.8**
33.48	**3.82**	**1.7**	**65%**	**2.1**	**1.0**	**0.6**	**0.6**	**9.8**	**41.4**

m^3/s	1	9	2	3	4	5	6	7	8
Little Nescopecl	NESC01	BLCK	NESC02	NESC04	LNESC	LNESC	LNESC	JEDDO	LNESC
Date-time		Mouth		U/S of LNESC	U/S of NESC	Conyngham	D/S of Jeddo	DISCHARGE	U/S of Jeddo
031010-0930	6.476	1.400	4.457	1.934	2.360	2.219	2.283	2.109	0.119
031024-0820	6.974	1.655	5.235	2.366	2.193	1.959	1.966	1.817	0.385
040321-0930	15.452	3.911	9.439	5.489	3.373	2.921	2.533	1.844	0.260
040501-0925	13.718	3.481	9.083	4.338	3.519	3.183	3.125	2.611	0.212
040512-0925	13.208	2.648	9.450	5.142	3.194	2.810	2.735	2.511	0.103
040524-0910	6.495	1.657	4.589	2.058	2.213	1.910	1.917	1.754	0.103
Max	**15.452**	**3.911**	**9.450**	**5.489**	**3.519**	**3.183**	**3.125**	**2.611**	**0.385**
Ave	**10.387**	**2.459**	**7.042**	**3.555**	**2.809**	**2.500**	**2.427**	**2.108**	**0.197**

Table 4. Annual Jeddo Tunnel Water Quality a

COEF	10	0.2834
JEDDO	**cfs**	**m^3/s**
1975	65.08	1.8443347
1991	24.03	0.6809982
1996	102.45	2.9033818
1997	55.40	1.5700083
Max	**102.45**	**2.90**
Ave	**61.74**	**1.75**

Table 6. Base Flow Separation of Tunnel Disc

Water Year	Total Tunn Discharge	"Direct Runoff"	Mean Base flow	Maxi (base
1996	89.6	8.2	81.4	
1997	78.8	8.6	70.2	
1998	69.9	4.7	65.2	
Average	79.4	7.2	72.3	--
Total m^3/s				
47.12				
33.48				

DISTRIBUTED GENERATION

Networking & Remote Monitoring

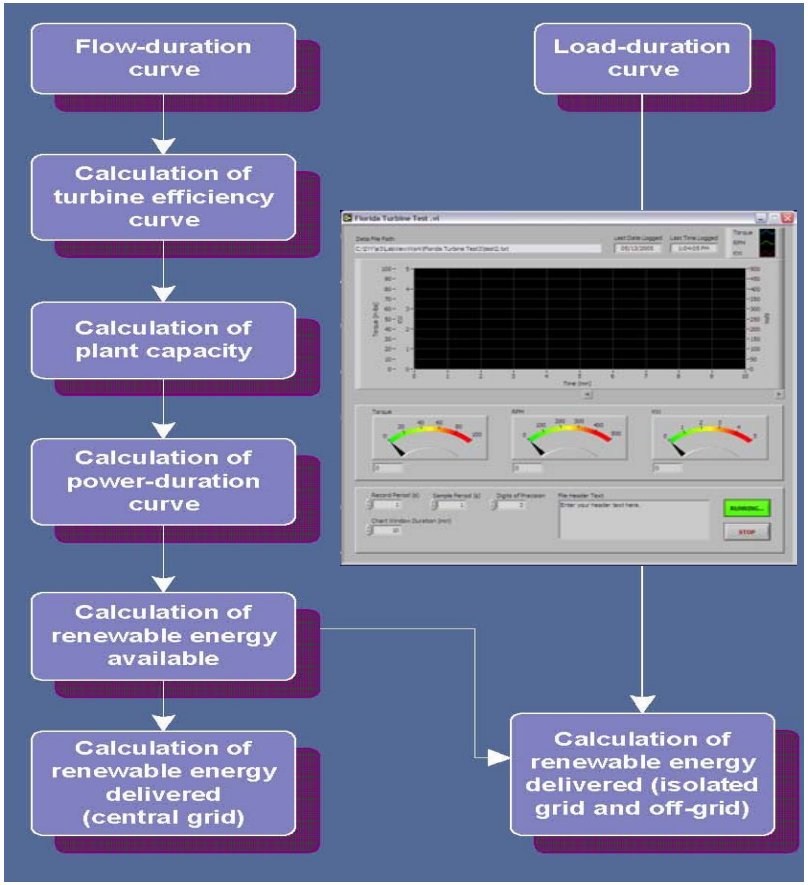

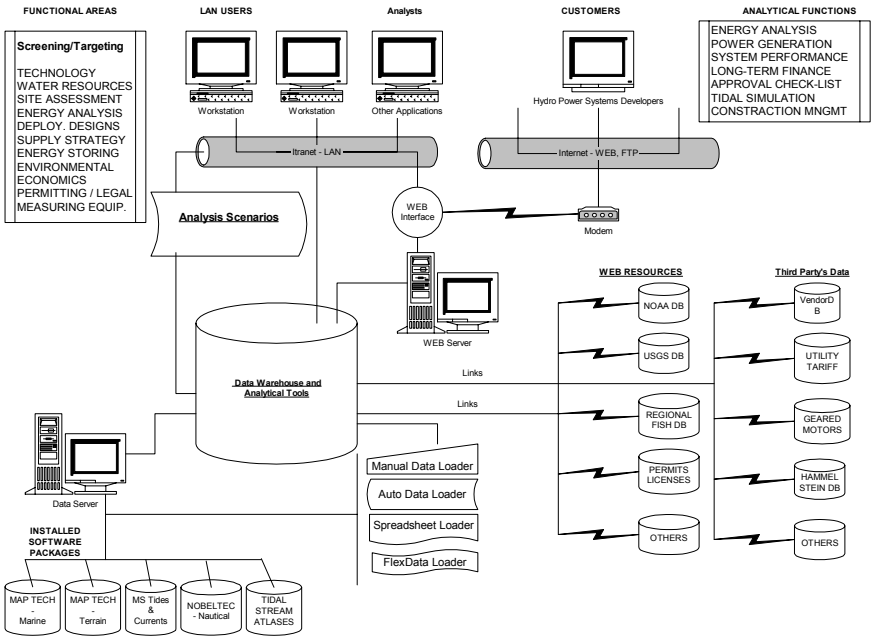

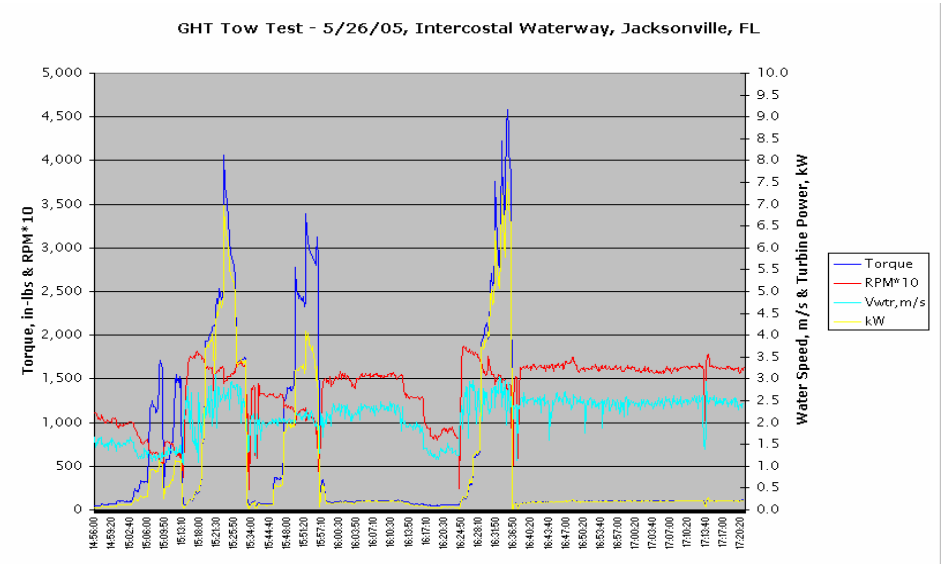

PROPOSED HYDRO ECONOMICS

HYDROPOWER ECONOMICS

CALCULATE

Wtr Speed, m/s	% of Time	Hrs/Yr	kW	kWh/Yr
3.0	8%	664	109	72,641
2.5	42%	3,322	63	210,189
2.0	25%	1,993	32	64,570
1.5	17%	1,329	14	18,160
1.0	8%	664	4	2,690
0.5	0%	-	0	-
TOTAL	100%	7,972		368,251

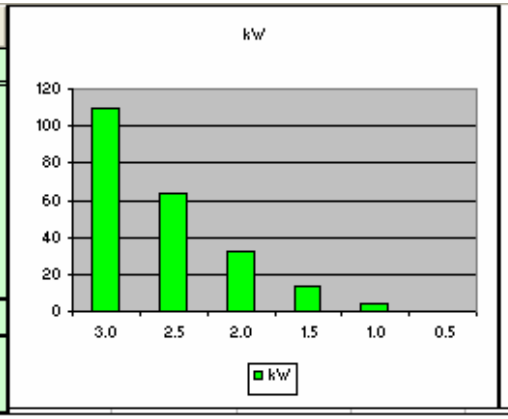

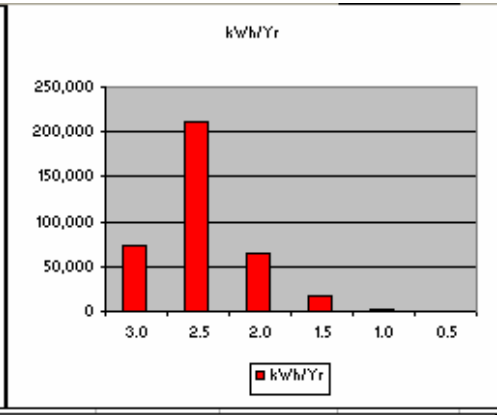

	kWh	kW
Energy Produced	797,160	109

TurbArea, m^2	10
MinWtrSpeed,r	0.5

kWmax Produced	100	100
Utilization Rate	91%	91%
Turbine Power Coef.	90%	90%
Turb. Elec. Eff.	90%	90%
Debt Term, Yr	30	30
Loan Amount	$300,000	$ 300,000
Loan Interest Rate	2.5%	2.50%
Elec. Inflation Rate	3.0%	3.00%
Work Inflation Rate	2.0%	2.00%
Maintenance ($/YR)	$10,000	$ 10,000
Rebate	$-	$ -
Elec Cost, $/kWh	$0.060	$ 0.0600
Term of Analysis	30	30

NPV	IRR	SimplePB
$615,292	11.2%	6.27

CUMMULATIVE SAVINGS $1,139,834

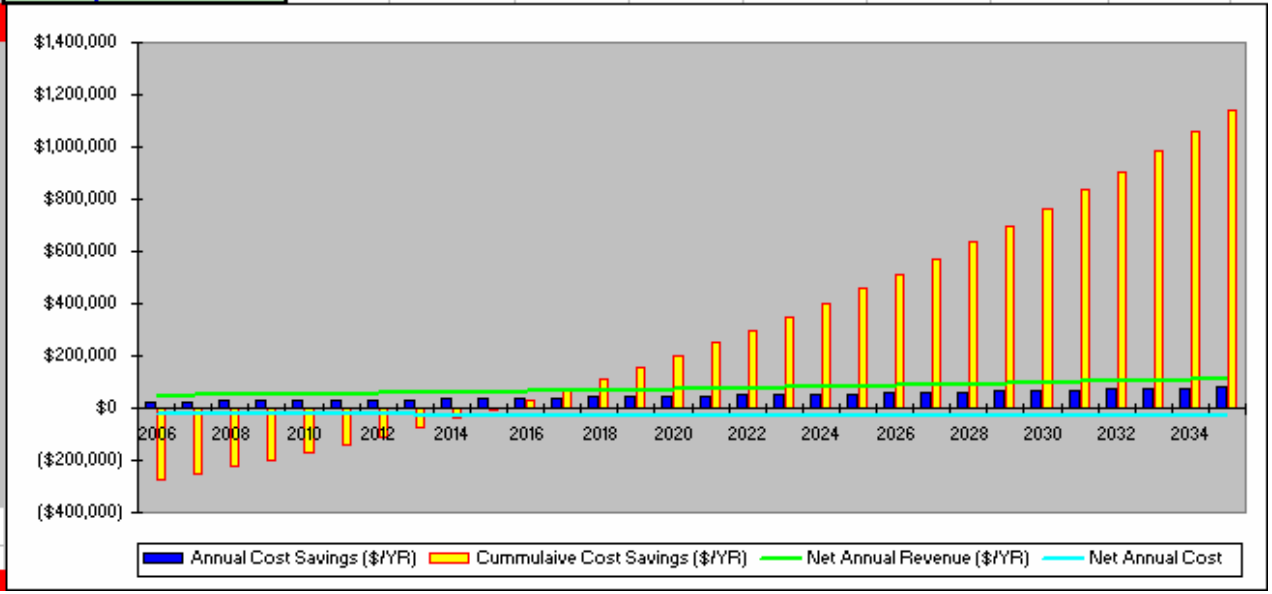

SUMMARY - Project

- 100 kW Jeddo Project Revenues
  - Cost approx. $300k,
  - 30 yrs Revenues – $1,700,000
- 1MW Watershed System with 9 hydro sites
  - Cost - approx. $ 3.0 to 3.7M
  - 30 yrs Revenues – $12,000,000
  - Integration with Clean up operations
- Broad Coalition of Community Support
- Positive Regional Impact
- Economic Revitalization
- Move Ahead with Detailed Study

SUMMARY – General Potential

- Improved Aeration for Remediation Process
  - Increase oxidation rates
  - Mixing
- Integration with Energy Needs of Remediation
  - Parallel or Linked
- Cite Specific Evaluation (1000 gpm)
- Networked Regional or Statewide Systems
  - Modular system design
  - Simplified Maintenance
  - Reduced Cost of Civil Works

Acknowledgements

- Natural Currents, LLC / E3, Inc.
- PA DEP
- EMARR
- Sustainable Energy Fund
- Penn State

- Columbia University, SIPA
- Center for Energy, Marine Transportation and Public Policy
- NYSERDA
- SUNY Maritime College

- Moody Fabrication and Machine
- Moody Marine